CODE 1027

Presa a staffa doppia con anello di rinforzo - Collier de prise double avec bague de renforcement
Doppelanbohrschellen mit Verstärkung

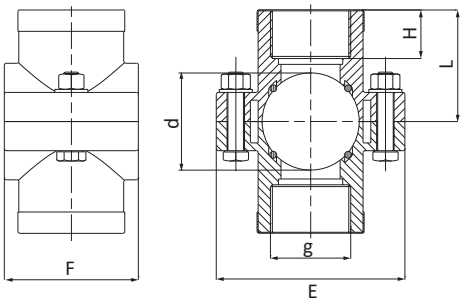

>>>

CODE	dxg [mm]	L [mm]	H [mm]	E [mm]	F [mm]	NF [mm]	PN [bar]
1027025002001	25x1/2”	38	20	76	49	2	10
1027025003001	25x3/4”	38	21	76	49	2	10
1027032002001	32x1/2”	41	17	81	56	2	10
1027032003001	32x3/4”	41	21	81	56	2	10
1027032004001	32x1”	44	23	81	56	2	10
1027040002001	40x1/2”	41	17	81	60	2	10
1027040003001	40x3/4”	46	18	81	60	2	10
1027040004001	40x1”	46	23	81	60	2	10
1027050002001	50x1/2”	50	17	98	69	4	10
1027050003001	50x3/4”	50	18	98	69	4	10
1027050004001	50x1”	52	20	98	69	4	10
1027050005001	50x1”1/4	57	25	98	69	4	10
1027063002001	63x1/2”	55	16	105	79	4	10
1027063003001	63x3/4”	55	18	105	79	4	10
1027063004001	63X1”	59	20	105	79	4	10
1027063005001	63x1”1/4	63	25	105	79	4	10
1027063006001	63x1”1/2	63	28	105	79	4	10
1027075002001	75X1/2”	62	17	120	90	4	10
1027075003001	75X3/4”	62	18	120	90	4	10
1027075004001	75x1”	65	21	120	90	4	10
1027075005001	75x1”1/4	68	24	120	90	4	10

>>>

CODE	dxg [mm]	L [mm]	H [mm]	E [mm]	F [mm]	NF [mm]	PN [bar]
1027075006001	75x1”1/2	68	23	120	90	4	10
1027075007001	75x2”	72	27	120	90	4	10
1027090002001	90x1/2”	70	17	135	90	4	10
1027090003001	90x3/4”	70	19	135	90	4	10
1027090004001	90x1”	72	21	135	90	4	10
1027090005001	90x1”1/4	76	24	135	90	4	10
1027090006001	90x1”1/2	76	24	135	90	4	10
1027090007001	90x2”	80	27	135	90	4	10
1027110002001	110x1/2”	80	17	168	99	4	10
1027110003001	110x3/4”	80	19	168	99	4	10
1027110004001	110x1”	84	20	168	99	4	10
1027110005001	110x1”1/4	86	23	168	99	4	10
1027110006001	110x1”1/2	86	23	168	99	4	10
1027110007001	110x2”	90	27	168	99	4	10
1027125002001	125x1/2”	108	25	190	106	6	10
1027125003001	125x3/4”	108	26	190	106	6	10
1027125004001	125x1”	109	26	190	106	6	10
1027125005001	125x1”1/4	109	25	190	106	6	10
1027125006001	125x1”1/2	113	28	190	106	6	10
1027125007001	125x2”	113	30	190	106	6	10